3

MULTIPLEXING, TRANSMISSION MEDIA AND SWITCHING

Unit structure :

3.0 OBJECTIVES

Multiplexing is sending multiple signals or streams of information on a carrier at the same time in the form of a single, complex signal and then recovering the separate signals at the receiving end. We will learn how by spreading the spectrum we can multiplex and safeguard the data from noise. To transmit data from one place to another medium is necessary . Detail discussion on different mediums is followed. Network layer switches data from source to destination over medium. Different switching techniques are listed in this chapter. We will conclude the chapter after discussing on DSL modems and their use to access Internet.

3.1 MULTIPLEXING

- Medium can be shared among more links when the bandwidth of the medium is more than the desired bandwidth between two links .
- Transmission of multiple source signals through single physical link is known as multiplexing.

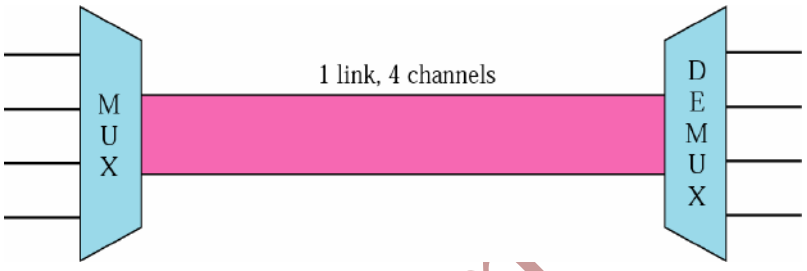

- In a multiplexed system, n lines share the bandwidth of one link. The figure shows a basic format of multiplexing.
- The four lines on the left direct their transmissions into a multiplexer (MUX), which combines them into a single stream. At the receiving end, that stream is fed into a demultiplexer (DEMUX), which separates the stream back into component transmissions.
- In the above figure the term link refers to the physical path, whereas the term channel refers to the portion of a link that carries transmission on the link. One link can have many channels.
- The three basic techniques used in multiplexing are: Frequency Division Multiplexing (FDM), Wave Division Multiplexing (WDM) and Time Division Multiplexing (TDM). The first two are analog in nature, whereas the third one is digital in nature.

3.1.1 Frequency Division Multiplexing (FDM)

- Frequency-division multiplexing (FDM) is a scheme in which numerous signals are combined for transmission on a single communications line or channel. Each signal is assigned a different frequency (sub channel) within the main channel.
- Each sending device modulates their signals at different carrier frequencies that flow travel across different channels.
- Channels are separated by strips of unused bandwidths called guard bands to prevent signals from overlapping.

- The following figure gives the conceptual overview of the multiplexing process. Each telephone generates a signal of similar frequency. Inside the multiplexer, these signals are

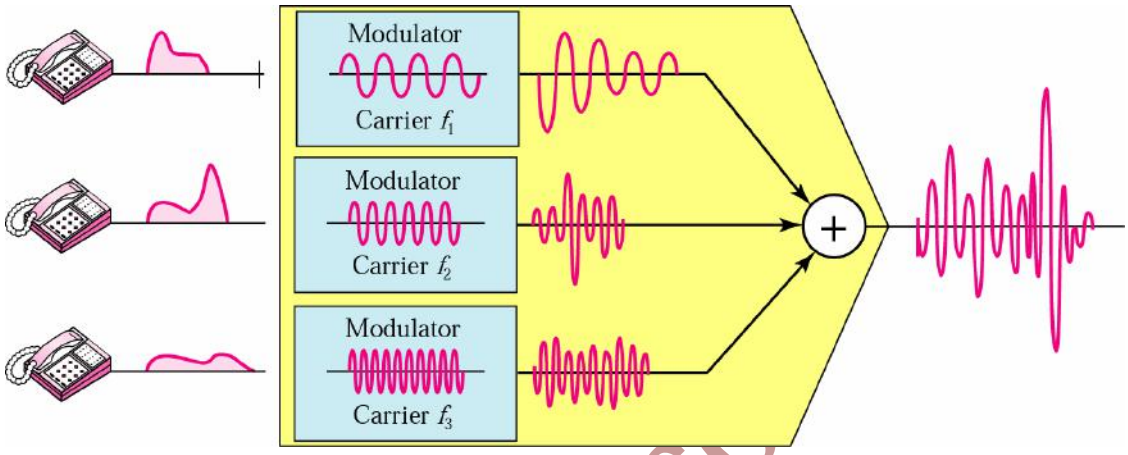

modulated at different carrier frequencies (f_1, f_2 and f_3). The resulting signals are combined and sent over the link.

- The demultiplexer separates the multiplexed signals into individual signals.
- The individual signals then pass through demodulators that separate the signals from their carriers and then pass them to the waiting receivers.

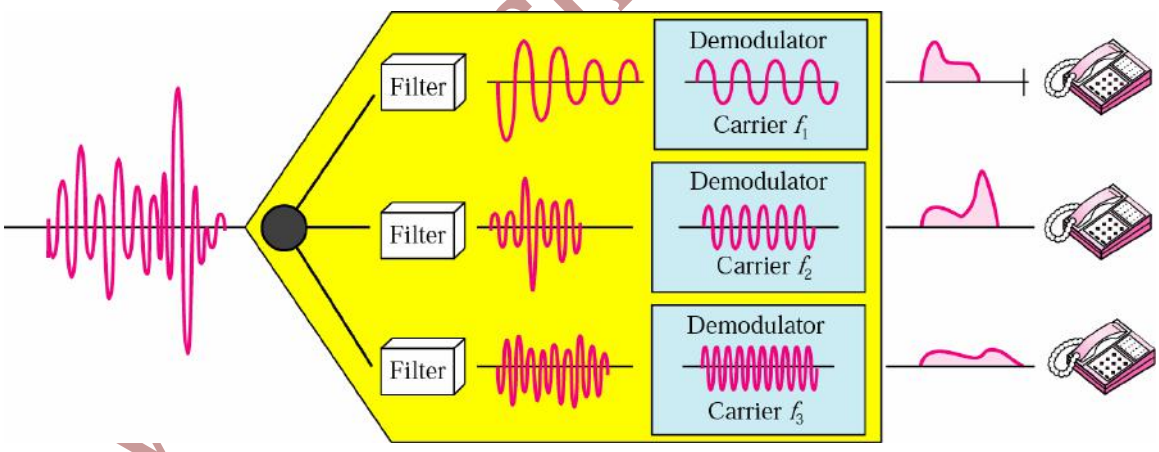

The Analog Hierarchy

- Telephone companies traditionally multiplex signals from lower bandwidth lines onto higher bandwidth lines. For analog lines, FDM is used.
- One such hierarchical system used by AT&T is made up of groups, super groups, master groups and jumbo groups.

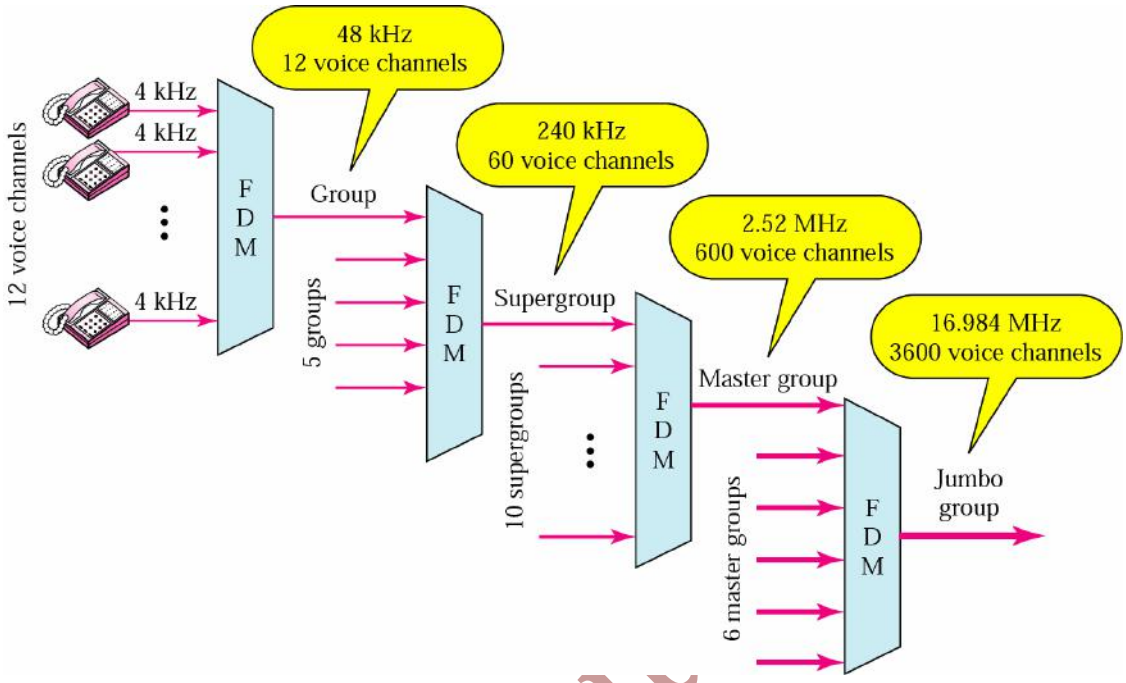

- 12 voice channels are multiplexed onto a higher bandwidth line to create a group. A group has 48 KHz of bandwidth and supports 12 voice channels.
- At the next level, 5 groups are multiplexed to create a super group. This super group has a bandwidth of 240 KHz and supports up to 60 voice channels.
- 10 super groups are then multiplexed to create a master group. This group should ideally have a bandwidth of 2.40 MHz, but because of guard bands in between, the necessary bandwidth is 2.52 MHz Master Groups support 600 voice channels.
- 6 master groups can be combined to form a jumbo group with an augmented bandwidth of 16.984 MHz

Other Applications of FDM

- Another very important application of FDM is AM and FM radio broadcasting.
- AM radio is assigned a special band from 530 KHz to 1700 KHz. Each AM station requires a 10 KHz bandwidth. Every station uses a different carrier frequency signal. A receiver would receive all these signals, but would filter or tune to the one that's desired.
- In FM, the situation is similar, except that FM uses a wider band of 88 MHz to 108 MHz, each station requiring 200 KHz.
- First generation cellular phones also make use of FDM.

3.1.2 Wavelength Division Multiplexing (WDM)

- Wave Division Multiplexing is designed to use the high data rate capability of fiber-optic cable. As optical fibers have a higher data rate, a single line may be used for multiple transmissions, by making use of multiplexing.

- In WDM the multiplexing and demultiplexing involve optical signals transmitted through fiber optic cables.
- WDM is an analog multiplexing technique.
- A wider band of light is formed using multiple narrow bands of lights.

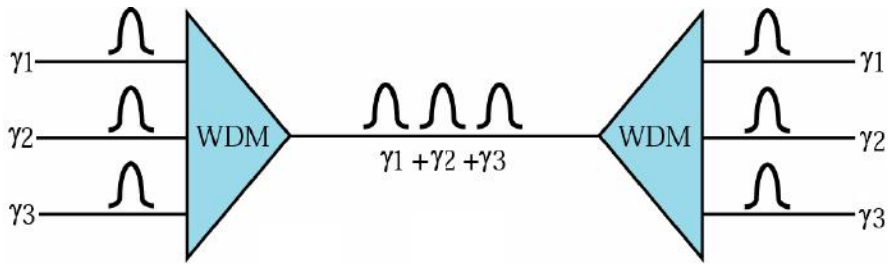

- At the receiver, the signals are separated by the demultiplexer. Instead of frequency, wavelengths of the signals are considered here.
- The idea behind WDM is very simple. Combining and splitting of light can be handled by making use of a prism. A prism can be used to combine several beams of light into one single beam and the reverse effect can be achieved at the other end by placing the prism in the required manner in the demultiplexer.

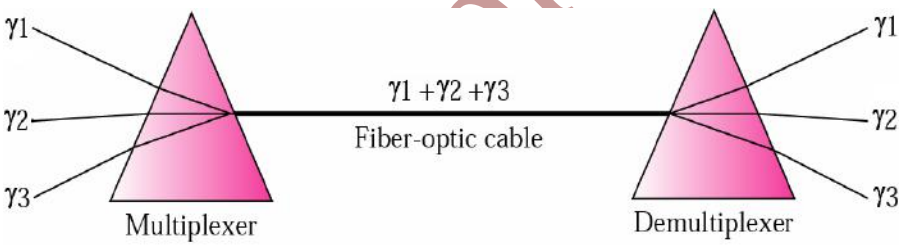

- WDM is widely used in SONET networks.
- A new method called DWDM (Dense WDM) can multiplex a very large number of channels at a very high efficiency.

3.1.3 Time Division Multiplexing (TDM)

- Time Division Multiplexing is a digital process that allows several connections to share the bandwidth of a single link. The bandwidth is not shared as a portion (horizontally), it is shared as per time (vertically). Each station occupies a portion of time on the link.

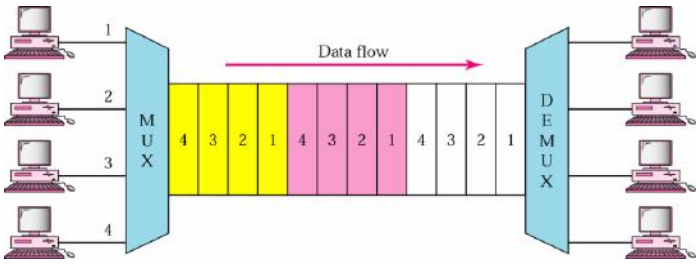

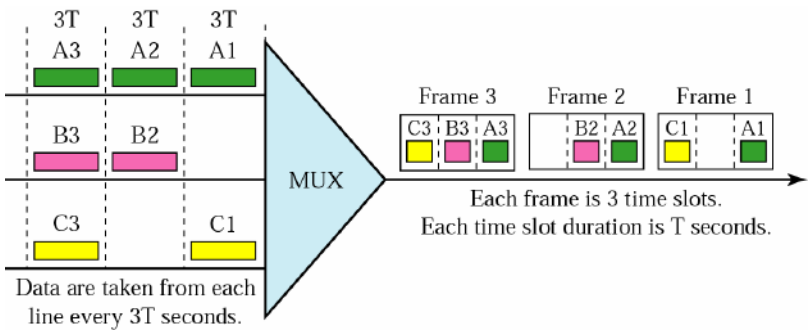

- Every system sends a unit of data and the link combines these units to make a frame. The size of the unit may vary from a single bit to many bits.
- For n inputs, the frame may have a minimum of n time slots.
- Suppose if the data rate of one machine is twice that of the other, then this high speed machine is given two time slots instead of one.
- In TDM, the data rate of the link is n times faster and the unit duration is n times shorter.
- TDM can be visualized as a fast rotating switch at the multiplexer and demultiplexer each.

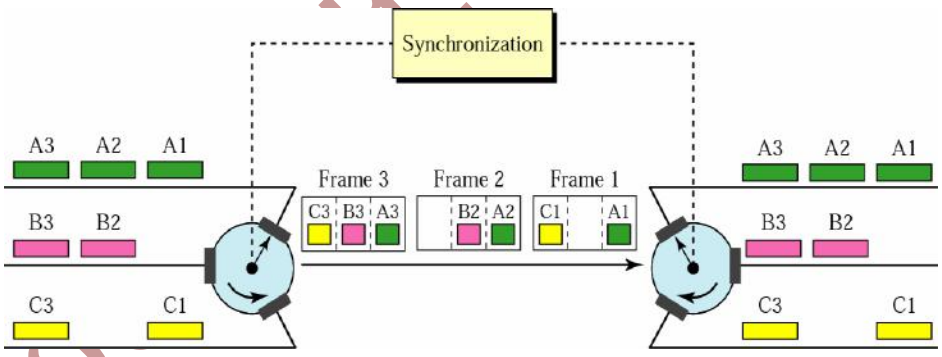

- At the multiplexer, the switch opens at each station for some time, allowing data to flow. This process is called interleaving as data from different sources are combined into the frame.

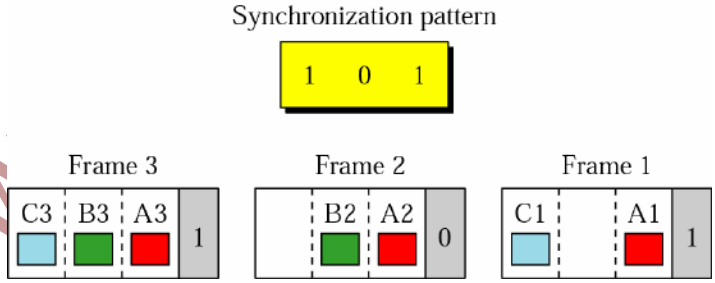

- Synchronization between the sender and the receiver is an important issue in TDM. For this, one or more synchronization bits are added to the beginning of each frame. These bits are called framing bits and they follow a pattern. In most cases these are alternating between 0 and 1.
- When the speeds are not integer multiples of each other, they can be made to behave so by a process called bit padding. So if a device is 1.5 times faster, it won't be given 1.5 time slots. It would be given two time slots, but for the extra time, the device

will pad 0 bits to the data. These extra bits may be discarded by the demultiplexer.

Digital Service (DS)

- Telephone companies implement TDM through a hierarchy of digital services.
- A DS-0 service is a single digital channel of 64 Kbps.
- A DS-1 is a 1.544 Mbps service that is 24 times DS-0 service, plus 8 Kbps of overhead.
- The DS-2 is a 6.312 Mbps service which is 96 times DS-0 service or 4 times DS-1 service. It has an overhead of 168 Kbps.

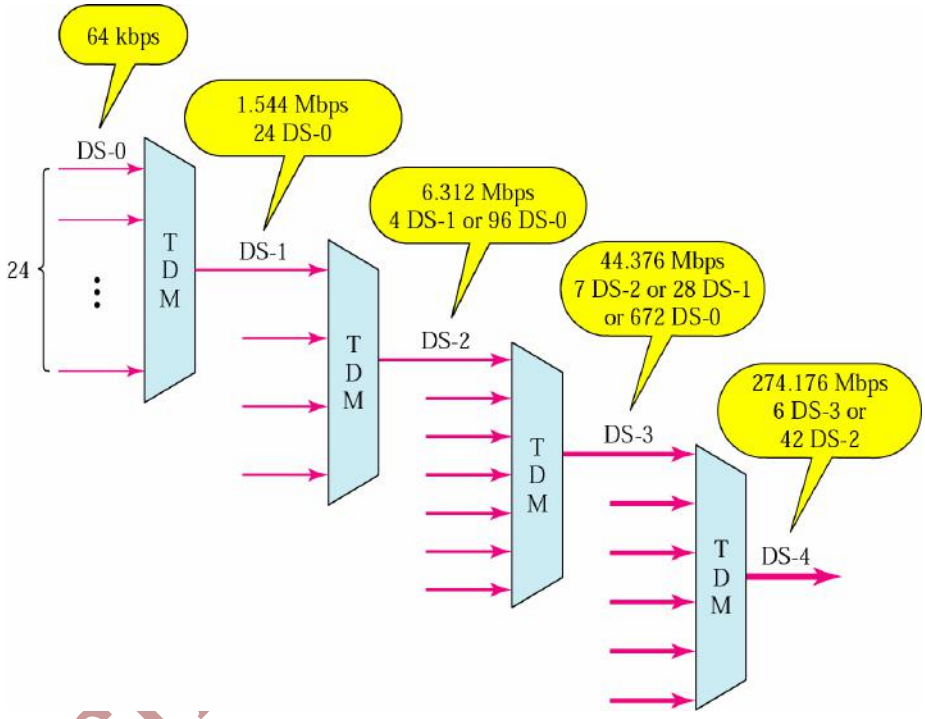

- DS-3 is a 44.376 Mbps service which is 672 times DS-0 or 28 times DS-1 or 7 times DS-2. It contains an overhead of about 1.368 Mbps. It can be used as a single DS-3 service or 7 DS-2 services or 28 DS-1 or 672 DS-0 services.
- DS-4 is a 274.176 Mbps service.
- DS-0, DS-1 etc. are all services. To implement these, the telephone companies make use of T lines (T-1 to T-4).

-

Service	Line	Rate (Mbps)	Voice Channels
DS-1	T-1	1.544	24
DS-2	T-2	6.312	96
DS-3	T-3	44.736	672
DS-4	T-4	274.176	4032

Inverse TDM

- Inverse Multiplexing is the opposite of multiplexing.

- It takes the data from a high speed line and breaks it into portions that can be sent across several low speed lines simultaneously.
- It is implemented where bandwidth on demand is required, so that one may use any channels out of all however and whenever they need them.

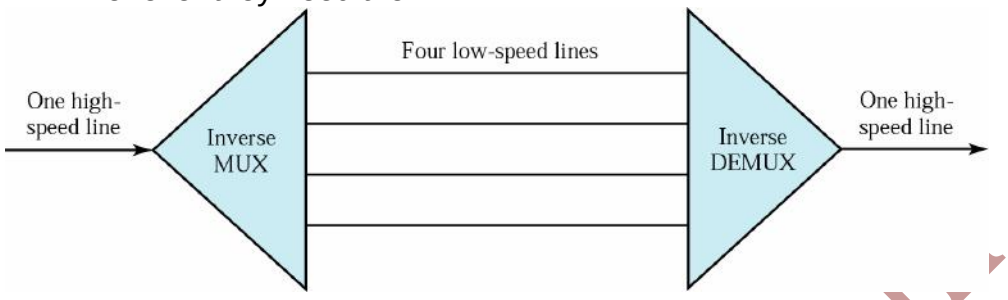

Other Applications of TDM

- Second generation cellular telephones make use of TDM.

Problems

Example 1:

Assume that a voice channel occupies a bandwidth of 4 KHz. We need to combine three voice channels into a link with a bandwidth of 12 KHz, from 20 to 32 KHz. Show the configuration using the frequency domain without the use of guard bands.

Shift (modulate) each of the three voice channels to a different bandwidth, as shown in the following figure:

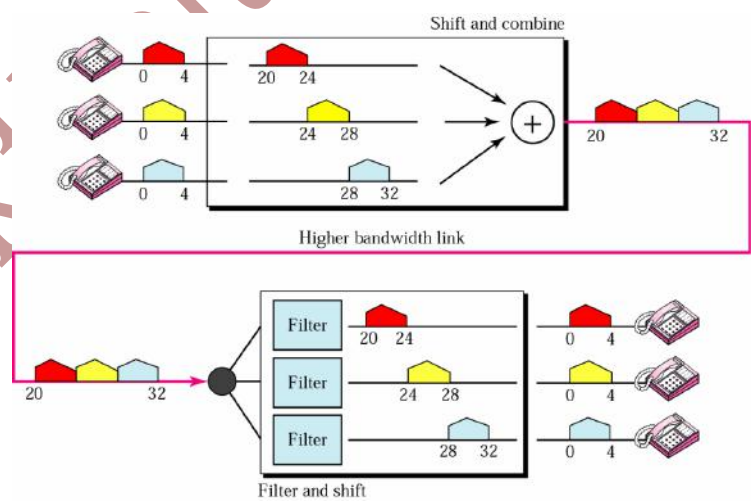

Example 2:

Five channels, each with a 100-KHz bandwidth, are to be multiplexed together. What is the minimum bandwidth of the link if there is a need for a guard band of 10 KHz between the channels to prevent interference?

For five channels, we need at least four guard bands. This means that the required bandwidth is at least 5 x 100 + 4 x 10 = 540 KHz, as shown in the following figure:

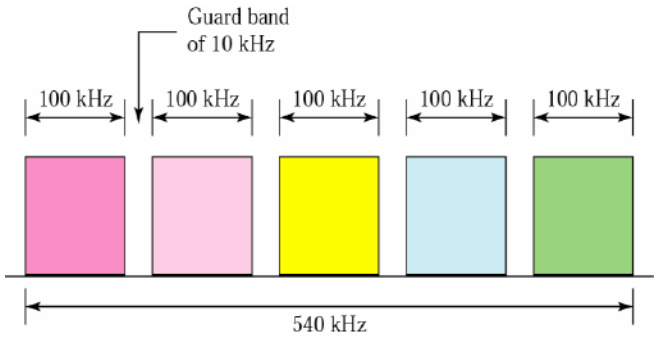

Example 3:

Four data channels (digital), each transmitting at 1 Mbps, use a satellite channel of 1 MHz Design an appropriate configuration using FDM

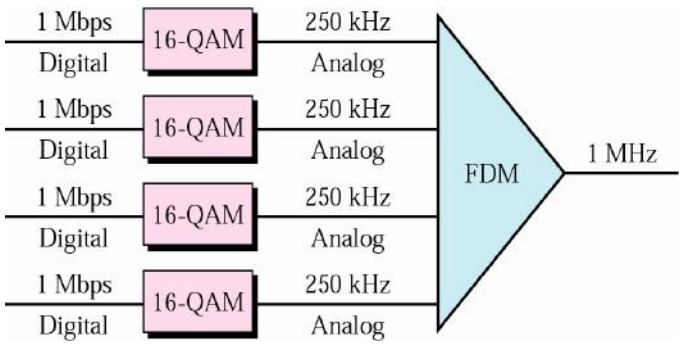

The satellite channel is analog. We divide it into four channels, each channel having a 250-KHz bandwidth. Each digital channel of 1 Mbps is modulated such that each 4 bits are modulated to 1 Hz. One solution is 16-QAM modulation. The following figure shows one possible configuration.

Example 4:

The Advanced Mobile Phone System (AMPS) uses two bands. The first band, 824 to 849 MHz, is used for sending; and 869 to 894 MHz is used for receiving. Each user has a bandwidth of 30 KHz in each direction. The 3-KHz voice is modulated using FM, creating 30 KHz of modulated signal. How many people can use their cellular phones simultaneously?

Each band is 25 MHz if we divide 25 MHz into 30 KHz, we get 833.33. In reality, the band is divided into 832 channels.

Example 5:

Four 1-Kbps connections are multiplexed together. A unit is 1 bit. Find (1) the duration of 1 bit before multiplexing, (2) the transmission rate of the link, (3) the duration of a time slot, and (4) the duration of a frame?

We can answer the questions as follows:

- The duration of 1 bit is 1/1 Kbps, or 0.001 s (1 ms).
- The rate of the link is 4 Kbps.
- The duration of each time slot 1/4 ms or 250 μs.
- The duration of a frame 1 ms.

Example 6:

Four channels are multiplexed using TDM. If each channel sends 100 bytes/s and we multiplex 1 byte per channel, show the frame traveling on the link, the size of the frame, the duration of a frame, the frame rate, and the bit rate for the link.

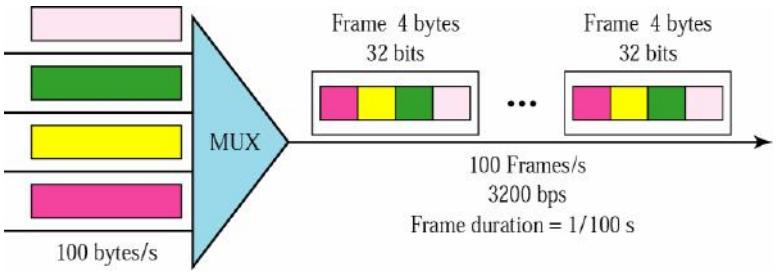

The multiplexer is shown in the adjacent figure.

Example 7:

A multiplexer combines four 100-Kbps channels

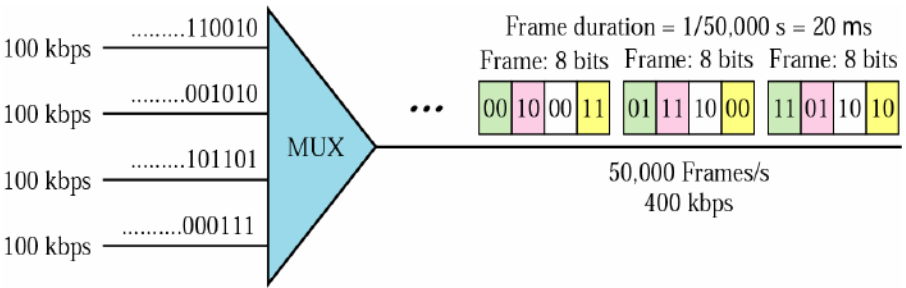

using a time slot of 2 bits. Show the output with four arbitrary inputs. What is the frame rate? What is the frame duration? What is the bit rate? What is the bit duration?
The adjacent figure shows the output for four arbitrary inputs.

Example 8:
We have four sources, each creating 250 characters per second. If the interleaved unit is a character and 1 synchronizing bit is added to each frame, find (1) the data rate of each source, (2) the duration of each character in each source, (3) the frame rate, (4) the duration of each frame, (5) the number of bits in each frame, and (6) the data rate of the link.
We can answer the questions as follows:
1. The data rate of each source is 2000 bps = 2 Kbps.
2. The duration of a character is 1/250 s, or 4 ms.
3. The link needs to send 250 frames per second.
4. The duration of each frame is 1/250 s, or 4 ms.
5. Each frame is 4 x 8 + 1 = 33 bits.
6. The data rate of the link is 250 x 33, or 8250 bps.

Example 9:
Two channels, one with a bit rate of 100 Kbps and another with a bit rate of 200 Kbps, are to be multiplexed. How this can be achieved? What is the frame rate? What is the frame duration? What is the bit rate of the link?
We can allocate one slot to the first channel and two slots to the second channel. Each frame carries 3 bits. The frame rate is 100,000 frames per second because it carries 1 bit from the first channel. The frame duration is 1/100,000 s, or 10 ms. The bit rate is 100,000 frames/s x 3 bits/frame, or 300 Kbps.

3.2 SPREAD SPECTRUM

Introduction

- Spread Spectrum refers to a system developed for wireless applications, to provide secure communications by spreading the signal over a large frequency band.
- Below figure represents a narrow band signal in the frequency domain.
- These narrowband signals are easily jammed by any other signal in the same band.
- Likewise, the signal can also be intercepted since the frequency band is fixed and narrow (i.e. easy to detect).

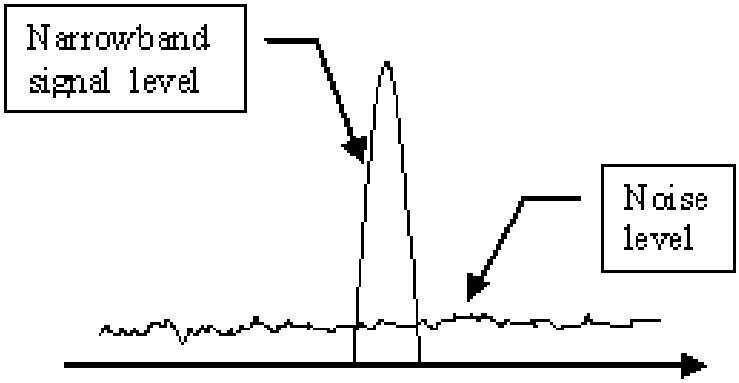

Figure : Narrow band signal, relatively easy to jam or intercepted.

- The idea behind spread spectrum is to uses greater bandwidth than the message bandwidth but the power remains the same.
- Moreover, this broadband signal looks like noise, for that frequency band, and therefore would be hard to tell if there is any signal at all.
- This provides security to the transmission since there would be no visible peak in the spectrum.
- Applications of SS are:
  1. Cellular telephones.
  2. Personal communications.
  3. Position location.
- There are two predominant techniques to spread the spectrum:
  1) **Frequency Hoping Spread Spectrum (FHSS) :** which makes the narrow band signal jump in random narrow bands within a larger bandwidth.
  2) **Direct Sequence Spread Spectrum (DSSS) :** which introduces rapid phase transition to the data to make it larger in bandwidth.

Characteristics of SS signals

- They are easily hidden, so it is difficult for an unauthorized user to even detect them.
- They are difficult to intercept for an unauthorized person.
- They are immune to distortion.
- They are resistant to joining.
- They have a multiple access capability.

The working of spread spectrum

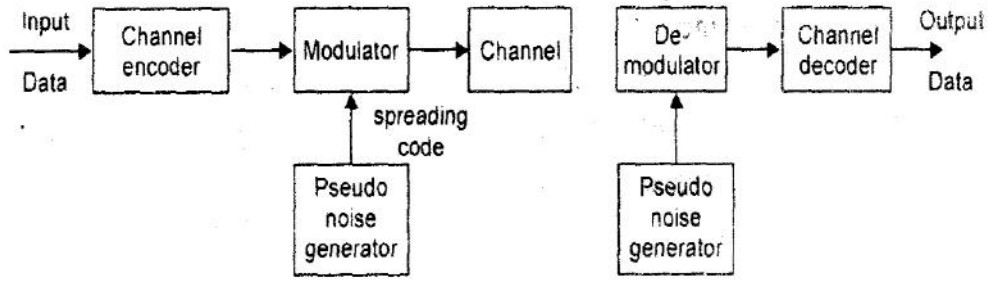

- Input is fed into a channel encoder that produces an analog signal with a relatively narrow bandwidth around some centre frequency.
- This signal is further modulated using a sequence of digits known as a spreading code or spreading sequence.
- On the receiving end, the same digit sequence is used to demodulate the spread spectrum signal.
- Finally, the signal is fed into a channel decoder to recover the data.

3.2.1 Frequency hopping spread spectrum (FH-SS)

- FHSS is a form of spread spectrum in which the signal is broadcast over a seemingly random series of radio frequencies, hopping from frequency to frequency at fixed intervals.
- Types of frequency hopping are:

  (1) Slow frequency hopping

  (2) Fast frequency hopping.

Slow-frequency hopping

- In slow frequency hoping the symbol rate of the signal is an integer multiple of the hop rate.
- That means several symbols are transmitted corresponding to each frequency hop.
- Therefore each frequency hops several symbols i.e. frequency hopping takes place slowly.

Fast frequency hopping

- In the fast frequency hopping the hop rate is an integer multiple of the symbol rate.
- That means during the transmission of one symbol, the carrier frequency will hop several times.

- Therefore each symbol transmission several frequencies hop.
- Thus the frequency hopping takes place at a fast rate.

Advantages

- The synchronization is not greatly dependent on the distance.
- The serial search system with FHSS needs shorter time for acquisition.
- The processing gain PG is higher than that of DSSS system.

Disadvantages

- The bandwidth of FHSS system is too large.
- Complex and expensive digital frequency synthesizers are required to be used.

Block Diagram of FHSS

- Figure shows the Block diagram of frequency hopping system.
- For transmission, binary data are fed into a modulator using some digital - to analog encoding scheme, such as frequency shift keying (FSK) or binary phase shift keying (BPSK).
- A PN (Pseudo-noise) source serves as an index into a table of frequencies each K bit on PN source specifies one of the 2k carrier frequencies.
- At each successive interval a new carrier frequency is selected.
- This frequency is then modulated by the signal produced from the initial modulator to produce a new signal with the same shape.
- On reception, the spread spectrum signal is demodulated using the same sequence of PN-derived frequencies and then demodulated to produce the output data.

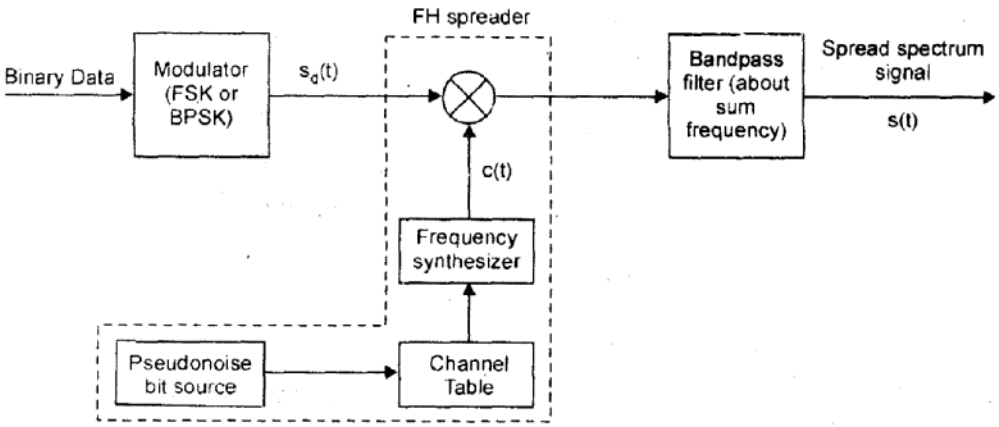

(a) Transmitter

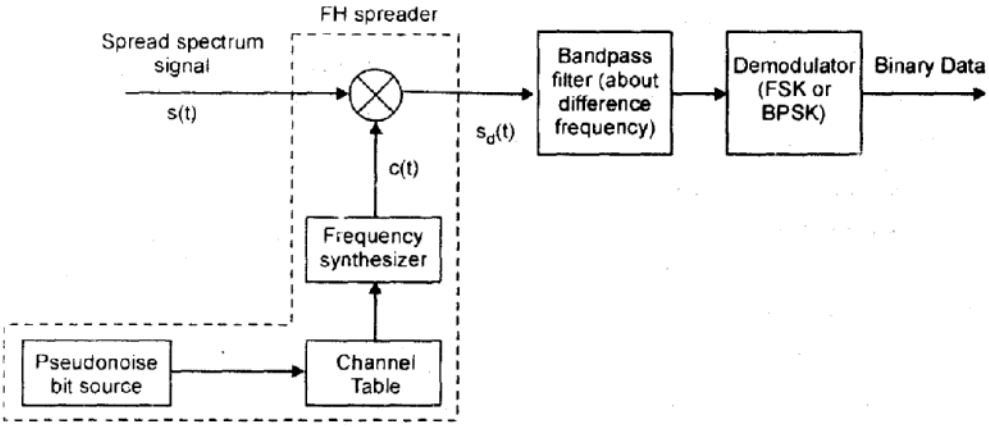

(b) Receiver

- **Difference between slow frequency hopping and Fast frequency hoping**

Slow Freq. hopping	Fast Freq. hopping
(1) More than one symbols are transmitted per frequency hop.	(1) More than one frequency hops are required to transmit one symbol.
(2) Chip rate is equal to the symbol rate.	(2) Chip rate is equal to the hop rate.
(3) Symbol rate is higher than hop rate.	(3) Hop rate is higher than symbol rate.
(4) Same carrier frequency is used to transmit one or more symbols.	(4) One symbol is transmitted over multiple carriers in diff. hops.
(5) A Jammer can detect this signal if the carrier freq. in one hop is known.	(5) A Jammer can not detect this signal because one symbol is transmitted. Using more than one carrier frequency.

3.2.2. Direct Sequence Spread Spectrum

- In the DSSS, each bit in the original signal is represented by multiple bits in the transmitted signal using a spreading code.
- The spreading code spreads the signal across a wider frequency band in direct proportion to the number of bits used.
- Therefore, a 10-bit spreading code spreads the signal across a frequency band that is 10 times greater than a 10bit spreading code.
- One technique with direct sequence spread spectrum is to combine the digital information stream with the spreading code bit stream using an exclusive. OR (XOR).
- The XOR obeys the following rules:

$$0 \oplus 0 = 0 \qquad 0 \oplus 1 = 1$$
$$1 \oplus 0 = 1 \qquad 1 \oplus 1 = 0$$

-
- The following fig. shows an example.

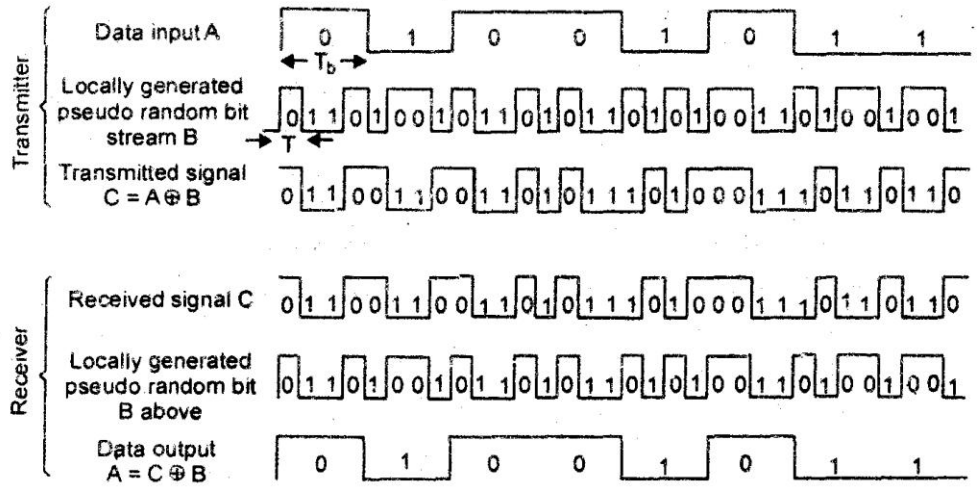

➢ **Fig. Example of Direct Sequence Spread Spectrum**

- Note that an information bit of one inverts the spreading code bits in the combination, while information bit of zero causes the spreading code bits to be transmitted without inversion.
- The combination bit stream has the death rate of the original spreading code sequence, so it has a wider bandwidth than the information stream.
- In this example, the spreading code bit stream is clocked four times the information rate.

Applications of DSSS systems.

- To combat the jamming.
- To reject the unintentional interference.
- To minimize the self interference due to multipath propagation.
- In the low probability of intercept signal.
- In obtaining the message privacy.
- Code division multiple access with DSSS.

Advantages of DSSS system.

- This system has a very high degree of discrimination against the multipath signals. Therefore caused by the multipath reception is minimized successfully.
- The performance of DS-SS system in presence of noise is superior to other system such as FHSS system.
- The system solves the problem of jamming most effectively.

Disadvantages of DSSS system.

- With the serial search system, the acquisition time is too large. This makes the DSSS system slow.
- The sequence generated at the PN code generator output must have to high rate.
- The channel bandwidth required, is very large.
- The synchronization is affected by the variable distance between the transmitter and receiver.

3.3 TRANSMISSION MEDIA

- Electromagnetic energy includes power, radio waves, infrared light, visible light, ultraviolet light, and X gamma and cosmic rays. Each of these constitutes a portion of the electromagnetic spectrum.
- Transmission media can be divided into two broad categories: guided and unguided.
- Guided media includes twisted-pair cable, coaxial cable, and fiber-optic cable.
- Unguided media is usually air.

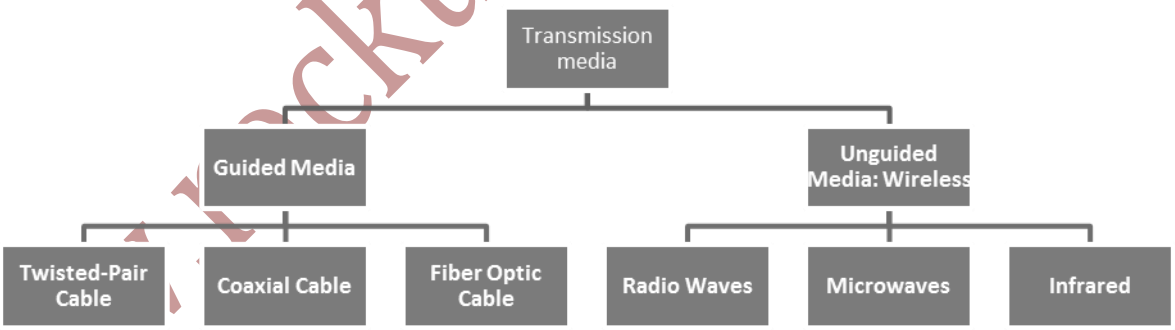

3.3.1 Guided Media

- They provide a physical channel or a conduit from one device to another.
- These include twisted-pair cable, coaxial cable and fiber-optic cable.
- A signal traveling through one of these is directed and contained by the physical limits of the medium.
- Twisted-pair and coaxial use metallic conductors that accept and transport signals in the form of electric current.
- Optical fiber is a glass cable that accepts and transports signals in the form of light.

Twisted-Pair Cable

Introduction:

- It consists of two conductors, each with its own plastic insulation, twisted together as shown in the figure.

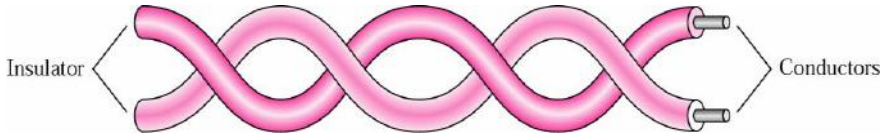

- One of the wires is used to carry signals and the other is used only as a ground reference.
- The twists at regular intervals make the receiver immune to any noise. This is because each one out of the pair is exposed to the noise equally and the noise nullifies. If the two wires are parallel, then the effect of noise is not equal on both the wires. And the receiver detects noise.
- The number of twists per unit length determines the quality. More twists means better quality.

UTP vs. STP:

- The most common twisted pair is the unshielded twisted-pair (UTP).
- The other version produced by IBM is the shielded twisted-pair (STP).

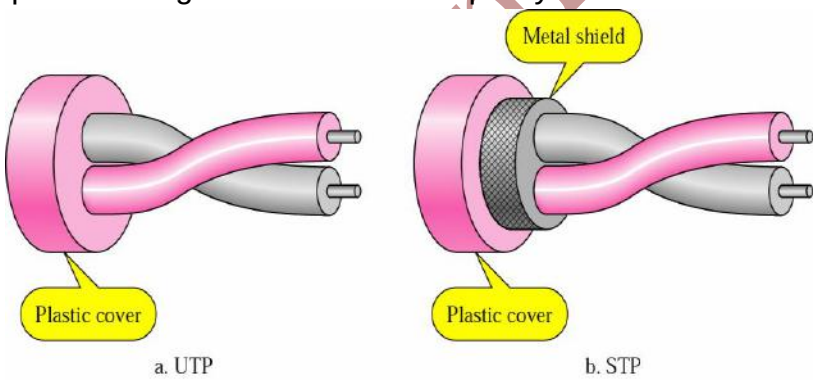

- STP cable has a metal foil or braided mesh covering that encases the insulated conductors. It prevents noise effectively, but makes the cable bulky and expensive.

Categories:

- The Electrical Industries Association (EIA) has developed categories to classify UTP into seven categories. These determine the quality of the cable, with 1 the lowest and 7 as the highest.

Category	Bandwidth	Data Rate	Digital/Analog	Use
1	very low	< 100 Kbps	Analog	Telephone
2	< 2 MHz	2 Mbps	Analog/digital	T-1 lines
3	16 MHz	10 Mbps	Digital	LANs
4	20 MHz	20 Mbps	Digital	LANs
5	100 MHz	100 Mbps	Digital	LANs
6 (draft)	200 MHz	200 Mbps	Digital	LANs
7 (draft)	600 MHz	600 Mbps	Digital	LANs

Connectors:

- The most common UTP connector is RJ45 (Registered Jack).

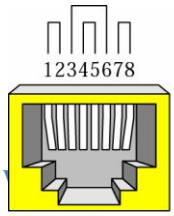

RJ-45 Female

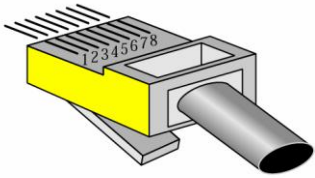

RJ-45 Male

Performance:

- One way to measure performance of twisted-pair cable is to compare attenuation versus frequency and distance.
- A twisted pair cable passes a wide range of frequencies.
- But with increasing frequency, the attenuation sharply increases.

Applications:

- Twisted-pair cables are used in telephone lines to provide voice and data channels.
- The local loop (the one that connects the subscribers to the central telephone office) is most commonly UTP cables.
- The DSL lines used by telephone companies are also UTP cables.
- LANs such as 10Base-T and 100Base-T also make use of UTP cables.

<u>Coaxial Cable</u>

- Coaxial Cable carries signals of higher frequency ranges than twisted pair cable.
- Coax has a central core conductor of solid or stranded wire (usually copper) enclosed in an insulating sheath, which is, in turn, encased in an outer conductor of metal foil or braid or a combination of the two.

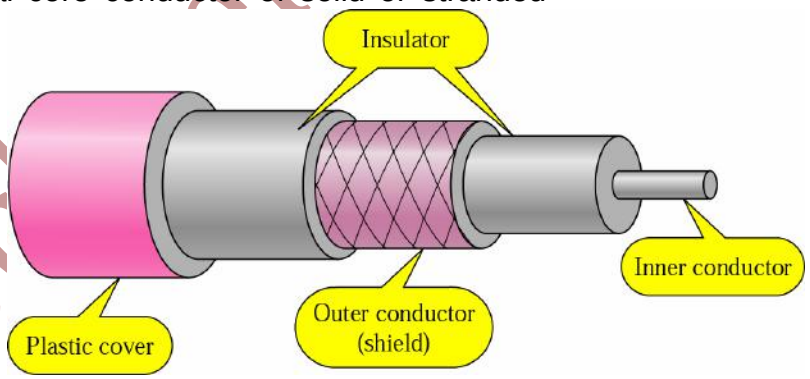

- The outer metallic wrapping serves both as a shield against noise and as the second conductor.
- The whole cable is protected by a plastic cover.

Coaxial Cable Standards:

- Coax cables are categorized by their ratings given by radio government (RG). Each RG number denotes unique set of physical specifications, including the wire gauge of the inner conductor, the thickness and type of the inner insulator, construction of the shield, size and type of the outer casing.

Category	Impedance	Use
RG-59	75 Ω	Cable TV
RG-58	50 Ω	Thin Ethernet
RG-11	50 Ω	Thick Ethernet

Coaxial Cable Connectors:

- The most common type of connector used is the Bayonne-Neil-Councilman, or BNC, connectors.

- BNC connector is used to connect the end of the cable to a device. BNC-T connector is used in Ethernet networks for branching.

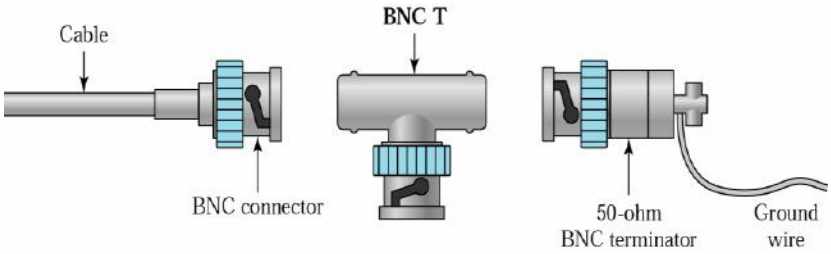

- The BNC terminator is used at the end of the cable to prevent the reflection of the signal.

Performance:

- The attenuation is much higher in coaxial cables as compared to twisted-pair cables. In other words, though coax has much higher bandwidth, the signal weakens rapidly and needs the frequent use of repeaters.

Applications:

- The use of coax started in analog telephone networks, where a single coax network would carry 10,000 voice signals.
- Later it was used in digital telephone networks.
- Cable TV networks use coaxial cables.
- Traditional Ethernet LANs make use of coaxial cables too. (10Base-2, 10Base-5)

<u>Fiber Optic Cable</u>

- A fiber optic cable is made of glass or plastic and transits signals in the form of light.
- If the angle of incidence is less than the critical angle, the ray refracts and moves closer to the surface. If the angle of incidence is equal to the critical angle, the light bends along the interface. If the angle of incidence is greater than the critical angle, the light reflects and travels again in the denser medium.

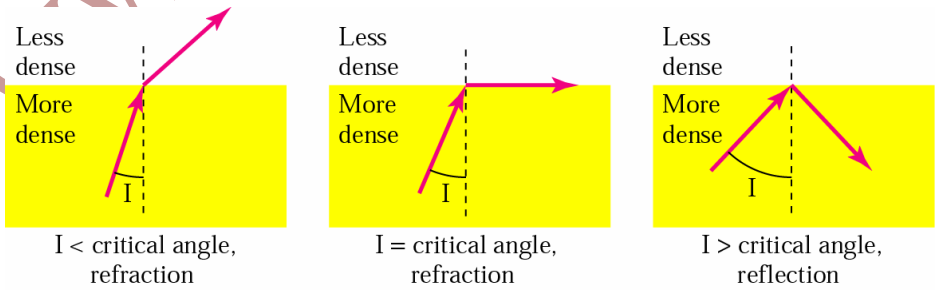

- Optical fibers use reflection to guide light through a channel. A glass or plastic core is surrounded by a cladding of less dense glass or plastic.

- The difference in the densities of the core and cladding is such that a beam of light traveling through the core is reflected off the cladding instead of going out.

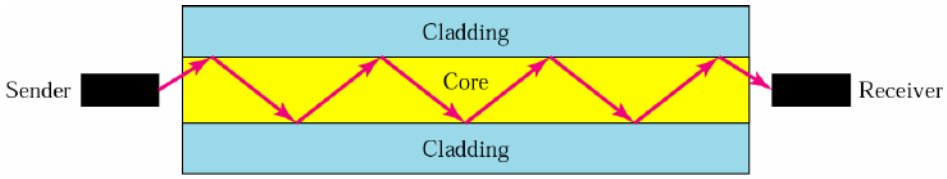

Propagation Modes:

- There are two different propagation modes, depending upon the different physical characteristics of the fiber optic cable: multimode and step mode. Multimode is further implemented as step-index or graded-index.
- Multimode is so named because multiple beams from light source move through the core in different paths.
- In multimode step-index fiber, the density of the core remains constant from the center to the edges. At the interface of the core and the cladding, there is a sudden change in density and it alters the beams angle of motion. The term step-index refers to the sudden change.

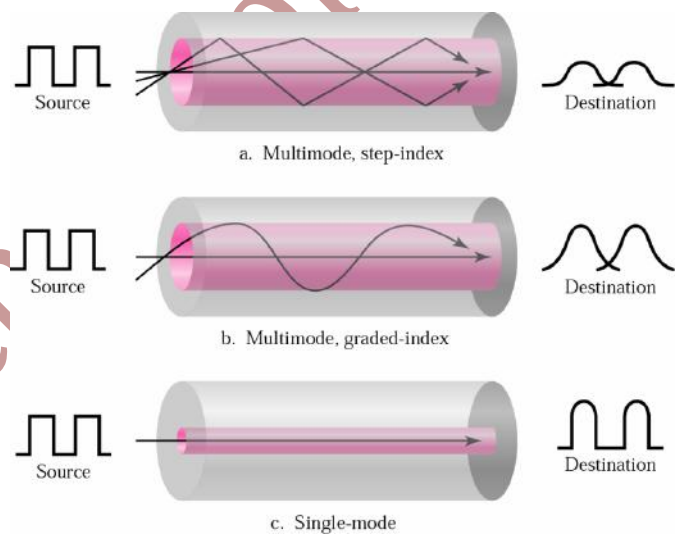

- In multimode graded-index fiber, the density of the core decreases from the center towards the edges. So the density is the highest at the center of the core and decreases gradually to its lowest at the edge. Here, the change is not abrupt, so the signal smoothly changes it path of motion.
- Single-mode uses step index fiber and a highly focused source of light that limits the beams to a small range of angles, all very close to horizontal. In this case, propagation of all the beams is almost identical and there is no delay.

Fiber Sizes:

- Optical fibers are defined by the ratio of the diameter of their core to the diameter of their cladding, both expressed in micrometers.

Cable Composition:

- The outer jacket is made of either PVC or Teflon. Inside the jacket are

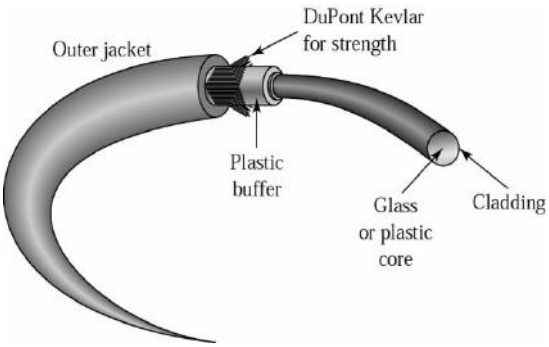

Kevlar stands to strengthen the cable. Kevlar is a strong material used in the fabrication of bulletproof vests. Below Kevlar there is another plastic coating to cushion the fiber. The fiber at the center consists of the core and cladding.

Fiber Optic Connectors:

- Fiber optic cables use three types of connectors.
- The subscriber channel (SC) connector is used in cable TV. It is a push/pull locking system. The straight-tip (ST) connector is used for connecting cable to networking devices. It is more reliable than SC. MT-RJ is a new connector with the same size as RJ45.

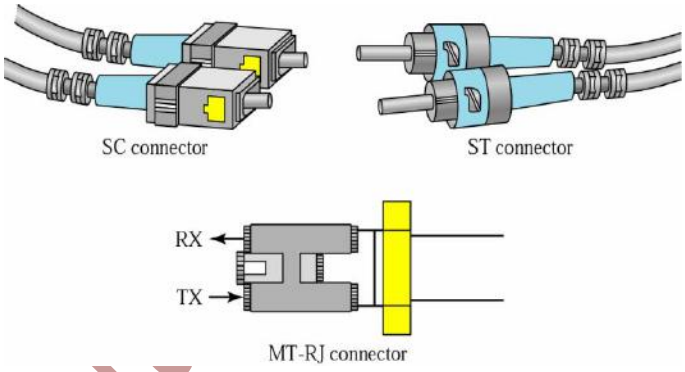

Performance:

- Attenuation is much lower as compared to twisted pair or coaxial cable. The performance is such that we require very few repeaters.

Applications:

- They are often found in backbone networks due to their high bandwidth.
- Some cable TV companies use a combination of coaxial and fiber optic cables. Optical cables provide the backbone structure, whereas coaxial provides the connection to user premises.
- LAN such as 100Base-FX and 1000Base-X also make use of fiber optic cables.

Advantages:

- Higher Bandwidth: Fiber optic cable support very high bandwidth as compared to twisted pair or coax cables.
- Less signal attenuation: The transmission distance is significantly greater here. A signal can run 50 km without requiring regeneration. In coax, repeaters are required every 5 km.
- Immunity to electromagnetic interference: Electromagnetic noise cannot affect fiber optic cables.
- Resistance to corrosive material: Glass is more resistant to corrosive materials than copper.
- Light weight: Fiber optic cables are much lighter than copper cables.
- More immune to tapping: Fibers are definitely more immune to tapping.

Disadvantages:

- Installation and maintenance: It is a relatively new technology and installation and maintenance requires expertise.
- Unidirectional: Propagation of light is unidirectional. If we need bidirectional communication we need to have two fiber optic cables.
- Cost: The cable and the interfaces are relatively more expensive. Their use is justified only when the demand for bandwidth is very high.

3.3.2 Unguided Media: Wireless

- Unguided media transport electromagnetic waves without using a physical conductor. This type of communication is often referred to as wireless communication.
- The following figure shows a part of the electromagnetic spectrum, ranging from 3 KHz to 900 THz, used for wireless communication.

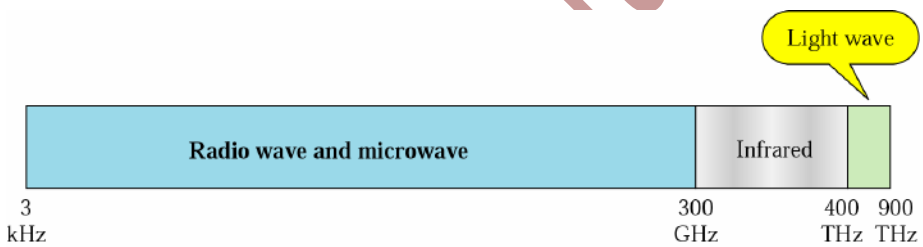

- Unguided signals can travel from source to destination in many ways. There is ground propagation, sky propagation and line-of-sight propagation.
- In ground propagation, radio waves travel through the lowest portion of the atmosphere, hugging the surface of earth. These are low frequency signals, and the distance they travel, depends upon their power.

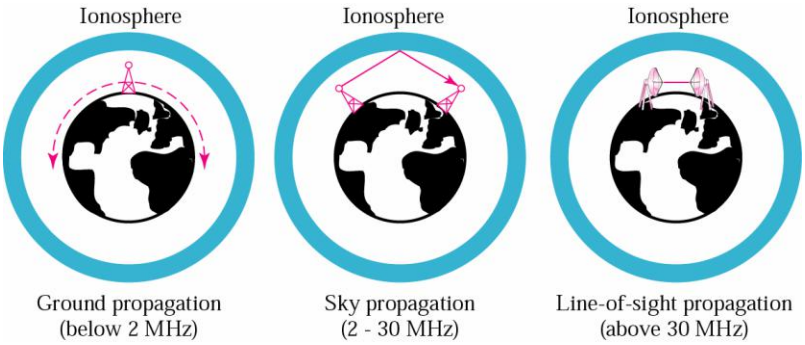

- In sky propagation, higher frequency radio waves are sent to the ionosphere and are reflected back to earth. These allow transmissions over greater distances.
- In line-of-sight propagation, very high frequency signals are transmitted in straight lines directly from antenna to antenna. Antennas are facing each other and should be tall enough or close enough to avoid the curvature of the earth.
- The section of the electromagnetic spectrum defined as radio waves and microwaves is divided into 8 ranges or bands.

- The details are as follows:

Band	Range	Propagation	Application
VLF (Very Low Frequency)	3–30 KHz	Ground	Long-range radio navigation
LF (Low Frequency)	30–300 KHz	Ground	Radio beacons and navigational locators
MF (Middle Frequency)	300 KHz–3 MHz	Sky	AM radio
HF (High Frequency)	3–30 MHz	Sky	Citizens band (CB), ship/aircraft communication
VHF (Very High Frequency)	30–300 MHz	Sky and line-of-sight	VHF TV, FM radio
UHF (Ultra High Frequency)	300 MHz–3 GHz	Line-of-sight	UHF TV, cellular phones, paging, satellite
SHF (Super High Frequency)	3–30 GHz	Line-of-sight	Satellite communication
EHF (Extremely High Frequency)	30–300 GHz	Line-of-sight	Long-range radio navigation

Radio Waves:

- Electromagnetic waves ranging in frequencies between 3 KHz and 1 GHz are normally called radio waves.
- Radio waves are Omni directional i.e. they are propagated in all directions. There is no requirement of antenna alignment here.
- The disadvantage here is that waves are susceptible to interference amongst themselves.
- Radio waves can travel long distances. Hence they are a good candidate for applications like AM radio.
- Radio waves can penetrate into walls. Hence we can receive transmissions in a building too.
- A disadvantage here is that we cannot isolate a transmission to a single building or area.
- The entire band is regulated by FCC.

Omni directional Antenna:

- Radio waves use Omni directional antennas that send out signals in all directions.
- Based on the wavelength, strength and purpose of transmission, we may have several types of antennas.

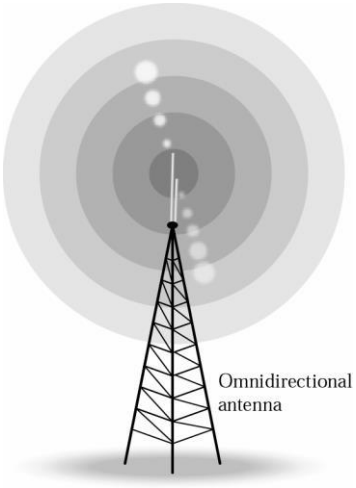

Applications:

- These are used for multicasting. AM and FM radio, television, cordless phone, paging are examples of multicasting.

Microwaves:

- Electromagnetic waves having frequencies between 1 and 300 GHz are called microwaves.
- These are unidirectional. When an antenna sends microwaves, they can be narrowly focused. This means the sending and the receiving antenna need to be aligned.
- Microwave propagation is line-of-sight propagation. So we may see these towers placed face to face or on high hills for better communications.
- They may also make use of repeaters for long-distance communications.
- Very high-frequency microwaves cannot penetrate walls.
- The microwave band is very wide and hence wider sub-bands can be assigned and hence a high data rate is possible.
- Use of certain portions of the band requires permission.

Unidirectional Antenna:

- The parabolic dish antenna is based on the geometry of a parabola. Every line parallel to the line of symmetry reflects off the curve and intersects at a common point called the focus.
- The parabolic dish acts like a funnel, catching a wide range of waves and directing them to a point.

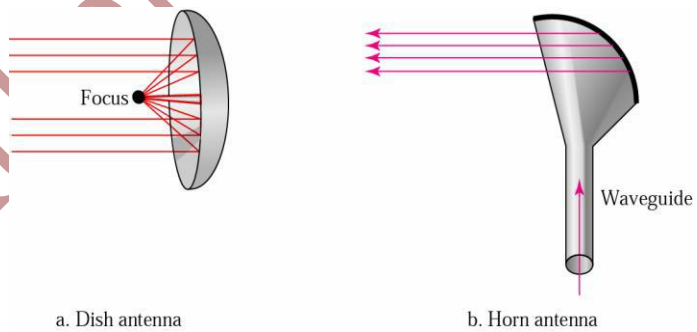

- Outgoing transmissions are sent through a horn aimed at the dish.
- The horn antenna looks like a gigantic scoop. Outgoing transmissions are broadcast up the stem and deflected outwards in a series of narrow parallel beams by the curved head. Received transmissions are collected by the scooped shaped horn and are handled in a similar manner as the dish.

Applications:

- These are useful for unicasting due to their unidirectional properties.
- They are also used in cell phones, satellite networks and wireless LANs.

Infrared:

- Infrared signals with frequencies from 300 GHz to 400 THz can be used for short range communications.
- They cannot penetrate through walls.

- This is advantageous as it prevents interference of one system and by another.
- But this characteristic makes them useless for long distance communication.
- We cannot use infrared in the sunlight as the infrared waves in the sunlight affect our communication.
- They use line-of-sight propagation.

Applications:

- The IR band is used for data transmission at a very high speed
- The infrared data association (IrDA) has established standards for using these signals for communications between devices like keyboards, mice, PCs and printers.

3.4 SWITCHING

- A switched network consists of a series of interlinked nodes, called switches.
- Switches are devices capable of creating temporary connections
- Between devices linked to the switch.
- Nodes are either connected to the end systems like computers or used only for routing.
- Networks can be divided into three broad categories:
- Circuit-switched networks, packet-switched networks, and message-switched.
- Packet-switched networks can further be divided into two subcategories-virtual-circuit networks and datagram networks.

3.4.1 CIRCUIT-SWITCHED NETWORKS

- A circuit-switched network is made of a set of switches connected by physical links, in which each link is divided into *n* channels.
- Circuit switching takes place at the physical layer.
- The stations must make a reservation for the resources to be used during the communication.
- These resources, such as channels (bandwidth in FDM and time slots in TDM), switch buffers, switch processing time, and switch
- Input/output ports, must remain dedicated during the entire duration of data transfer until the teardown phase.
- Data are not packetized.
- The data are a continuous flow sent by the source station and received by the destination station
- There is no addressing involved during data transfer.
- The switches route the data based on their occupied band (FDM) or time slot (TDM).
- There is end-to-end addressing used during the setup phase.

Three Phases:

- The circuit-switched network requires three phases: Connection setup, data transfer, and connection teardown.

Setup Phase:

- Connection setup means creating dedicated channels between the switches.
- Source sends a setup request that includes the address of destination to the switch connected to source.
- Source switch forwards the request to other switch.
- This process continues till the destination is reached.
- Destination sends the acknowledgement to the source.
- Than connection gets established.

Data Transfer Phase

- After the establishment of the dedicated circuit (channels), the two parties can transfer data.

Teardown Phase

- When one of the parties needs to disconnect, a signal is sent to each switch to release the resources.

Efficiency

- Circuit-switched networks are not as efficient as the other two types of networks because resources are allocated during the entire duration of the connection.
- These resources are unavailable to other connections.

Delay

- During data transfer the data are not delayed at each switch.
- Delay is caused due to time needed to create the connection, transfer data, and disconnect the circuit.

3.4.2 Datagram Switched Networks

- Packets are the data units routed in packet-switched networks.
- Size of packets is decided by the underlying network protocol.
- There is no resource allocation in packet network.
- Recourses are allocated on demand.
- The lack of reservation creates delay.
- In datagram network packets are independent on the network layer.

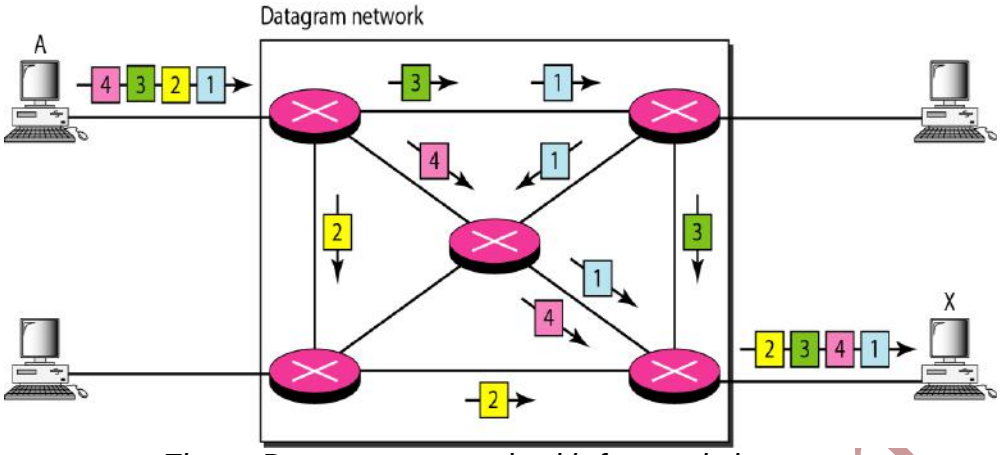

Figure Datagram network with four switches

- The order of packet delivery is not important.
- Ordering packets is the done at the end system.
- The datagram network does not keep state of connection, hence also known and connectionless network.
- There is no setup and teardown phase.
- Datagram switching approach is used in Internet Protocol at network layer.

Packet Routing

- The routing decisions of packet it taken at each switch in the network.
- Routing decision is taken on the basis of routing table available with each switch.
- Such routing table is build using destination address and updated periodically.
- Each packet header includes destination address.
- The switch checks the destination address and on the basis of routing table finds the corresponding node to forward the packets.
- The destination address remains same throughout the packet journey.

Efficiency

- Resources are allocated on demand basis.
- Recourses can be reallocated to the other source if there is delay in transmission with the earlier source.
- Reallocation of resources makes datagram network more efficient.

Delay

- Packet has to wait at each switch till the routing decision is taken.
- The delay is not uniform throughout the network.

3.4.3 Virtual Private Network

- Virtual circuit network has characteristics of both circuit switch network and datagram network.
- VCN is implemented at the data link layer.

- Data units are divided into frames.
- VCN has setup, teardown and data transfer phase.
- Resources can be allocated at the setup phase or on demand.
- Data is divided into packets.
- Packet header includes local address of the intermediate switches and not destination address.
- All packets follow same path through the network.

Addressing in VCN

- VCN ha two type of addresses: Global address and Virtual Circuit Identifier (VCI) the local address.
- Global address is used as unique source and destination address throughout the network,
- Global address is used to generate VCI's.
- VCI is the identifier used to forward the data between intermediate switches.
- The incoming frame to a switch has VCI and the frame when leaves the switch has a different VCI.

Three Phases

- The three phase in VPN is setup, data transfer and teardown phase.

Setup phase

- It creates routing entries for the virtual circuit.
- To do so two steps are requires: set up request and acknowledgment.

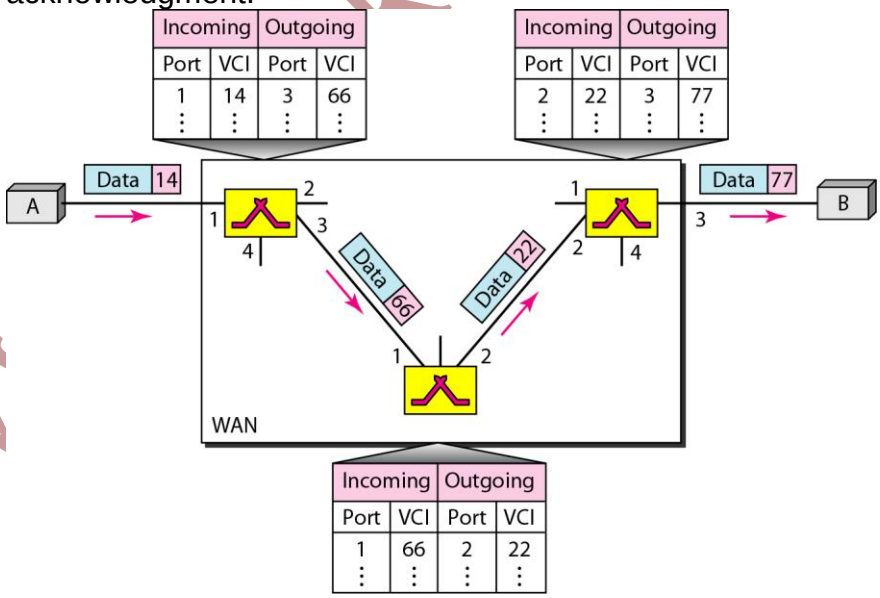

Setup Request:

- Suppose data has to be send from A to B.
- When source A sends setup request to the switch, the switch makes three entries in its table viz: incoming port, incoming VCI and outgoing port.
- The outgoing VCI remains empty as it will be filled up in acknowledgment phase.

- In the similar way all the intermediate switches upto destination B makes their routing entries.
- All the VCI's between switches are local addresses.

Acknowledgment :

- Acknowledgement frame completes the destination VCI entry in the switching table.
- The destination B selects a VCI for incoming frames from source A.
- The acknowledge frame is in turn send back to all the switches until source A.
- Remember the incoming and outgoing VCI's are different at each switch.

Data Transfer Phase

- Once all the four columns entries of the switch tables done, switches uses this information to forward frames.
- Data is transferred using virtual circuit established.
- The connection is active till source is sending data to the destination.

Teardown phase

- The source sends a teardown frame to disconnect with destination.
- The destination confirms with teardown confirmation frame.
- All the switches delete the corresponding entries from their table.

Efficiency

- All the frames between source and destination follows same path.
- Frames may arrive at the destination at different delay if resource allocation is on demand.
- The source can confirm the availability of resource without reserving it.

Delay

- One time delay for setup and one time delay for teardown.
- Frames need not wait for forwarding as path is predefined.

3.4.4 Structure of Switch

Structure of Circuit Switch

Space Division Switch

- In space division switches, the paths in the circuit are separated from each other spatially. This technology was originally devised for analog networks, but is now used in digital networks too.

Crossbar Switch:

- A cross bar switch connects n inputs to m outputs in a grid, using electronic micro-switches at each cross point. The major limitation is the number of cross points required. For connecting n inputs to m outputs, one would require n x m cross points. E.g. for 1000 inputs and 1000 outputs, the number of cross points would be 1000000. A switch with so many cross points is impractical and statistics show that in practice only 25 percent of the cross points are used at any given time. The rest are idle.

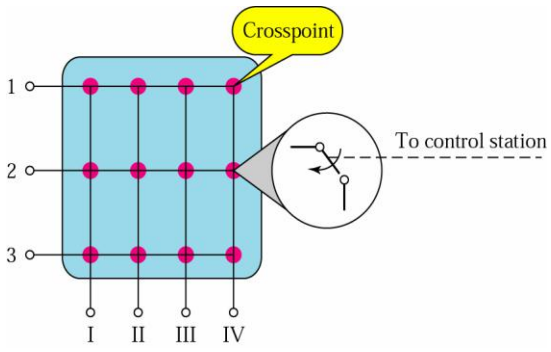

Multistage Switch:

- A solution to the limitations of a crossbar switch is the multistage switch. It combines crossbar switches in several stages. In multistage switching, devices are linked to switches that, in turn, are linked to other switches.

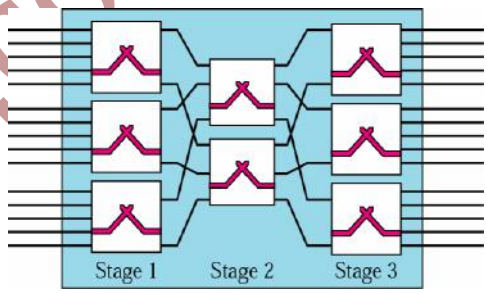

- The design of a multistage switch depends upon the number of stages and the number of switches required in each stage. Normally the middle stage has fewer switches as compared to the first and third stage.
- Imagine that we need to connect 15 inputs and 15 outputs. If we use a crossbar switch, we would require 15 x 15 cross points. i.e. 225 cross points.
- In case we create a multistage switch, as shown below, the number of cross points would be reduced greatly.

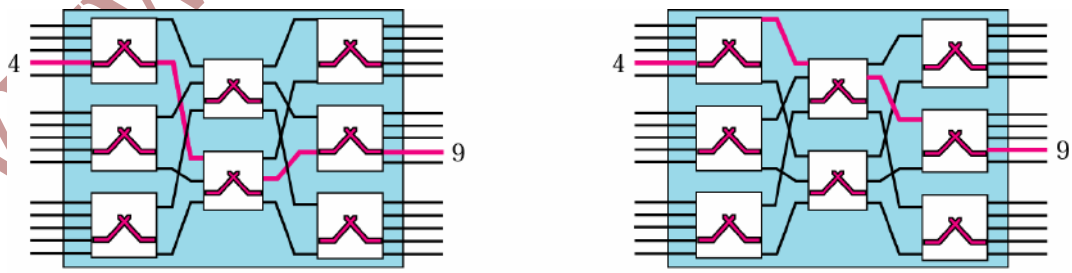

a. First option b. Second option

- The three first stage switches are 5 x 2, so in all we have 3 x (10) = 30 cross points.
- The two second stage switches are 3 x 3, so we have 2 x (9) = 18 cross points.
- The three third stage switches are 2 x 5, so in all we have 3 x (10) = 30 cross points.
- So the total number of cross points would be 78.

- As seen from the figures above, multistage switches provide several options for connecting each pair of linked devices.
- The reduction in the number of cross points results in a phenomenon called blocking during period of heavy traffic. Blocking refers to times when one input cannot be connected to an output because there is no path available between them – all the possible intermediate switches are occupied.
- In a single stage switch, blocking does not occur as every combination of input-output has its own cross point.
- Increase in the number of stages, results in lesser cross points, but increases blocking.
- The crossbar switch is a non-blocking switch.

<u>Time Division Switch</u>

- Time division switching uses time-division multiplexing to achieve switching. The two most popular methods used here are: Time slot interchange and TDM bus.

Time Slot Interchange:

- The following figure shows four input lines connected to four output lines. Imagine that each input line wants to send data to an output line in the following manner: 1 → 3, 2 → 4, 3 → 1, 4 → 2.

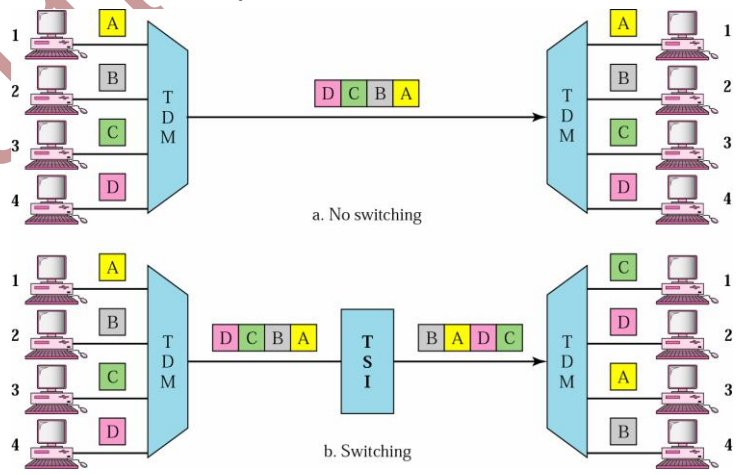

- In ordinary TDM this result is not achieved. But if we insert a device called a time-slot interchange (TSI) into the link, we can achieve the desired result.
- The TSI changes the ordering of the slots based on the desired connections.
- A TSI consists of random access memory (RAM) with several locations. The size of each location is the same as the size of a single time slot. The number of locations is

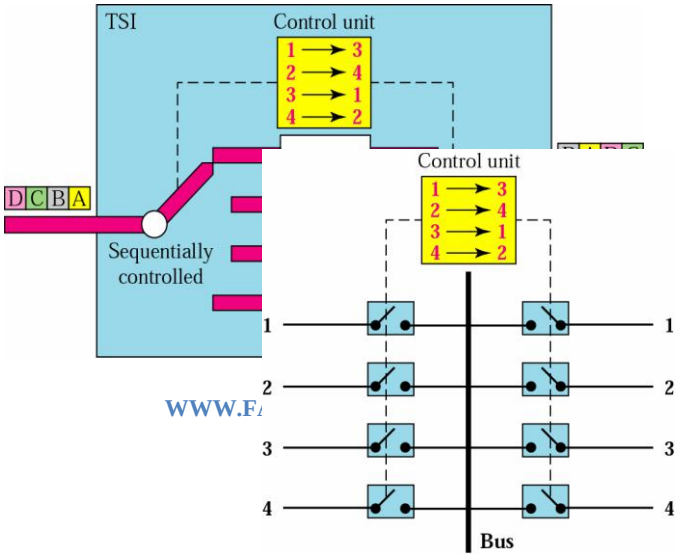

generally the same as the number of inputs. The RAM fills up with incoming data from the time slots in the order received. Slots are then sent out in an order based on the decisions of the control unit.

TDM Bus:

- The following figure shows a simple version of TDM bus. The input and output lines are connected to a high speed bus through input and output gates (micro-switches). Each input gate is closed during one of the time slots. During the same time slot, only one output gate is closed.
- This pair of gates allows data to be transmitted from one specific input to one specific output. The control unit opens and closes the gates according to the switching need.

Space and Time Division Switch Combination

- The advantage of space division switch is that it is instantaneous. Its disadvantage is that the number of cross points required may become large as when we need to prevent blocking.
- The advantage of time division switch is that it needs no cross points. Its disadvantage is that (in case of TSI), processing each connection creates a delay. Each time slot must be stored in the RAM, processed, retrieved and then passed on.
- In the third option, we can combine space-division and time-division technology to get the best advantage of the both.

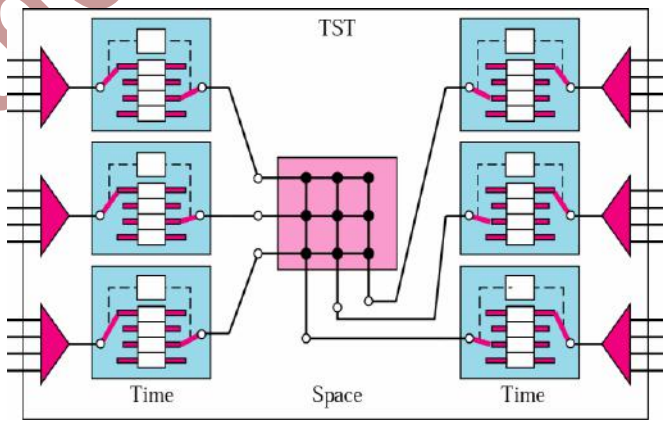

- Multistage switches of this sort can be designed as time-space-time (TST), time-space-space-time (TSST), space-time-time-space (STTS), or other possible combinations.

Structure of Packet Switch

- Packet switches exist for different networking technologies
  - Internet: IP protocol suite
  - Ethernet: Ethernet switches
- – ATM (Asynchronous Transfer Mode): ATM switch
- Packet switch has four components:
  input ports, output ports, the routing processor, and the switching fabric, as shown in Figure.

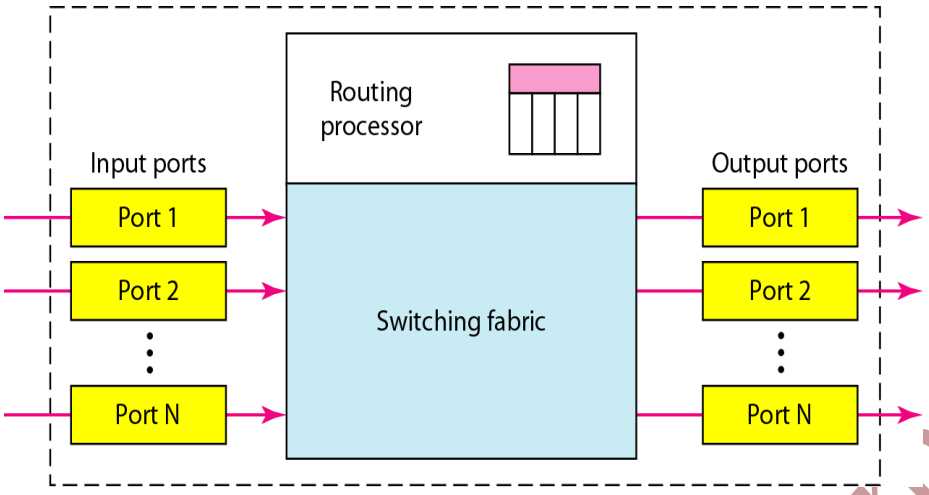

Input port

- Input port receives signal from physical and data link layer.
- Signal received from physical layer is converted into bits.
- Data link layer frames are defragmented into packets.
- Error detection and correction is done.
- Data is buffered if required and then given to switching fabric.
- These packets are routed through the network layer.

Output Port

- Output port does input port function in reverse order.
- Packets are converted to frames and then to signals.
- Again buffering id done if required.

Switching Fabric

- It fetches data from the input port queue and switches it to respective output port queue...
- This switching has to be done at fastest.
- Specialized switching fabrics are designed for fast packet switching viz: Crossbar Switch and Banyan Switch.
- Let us discuss banyan switching fabrics in detail.

Crossbar switching fabric is discussed earlier.

Banyan Switch

- Named after banyan tree.
- It's a multistage switch with micro switches at each stage.
- Micro switches routes data based on the output port represented as binary string.
- First stage switch routes based on higher order bits.
- Second stage switches routes on second higher bits and so on.
- If there is n input and n output port switch (symmetric switch) than $\log_2 n$ stages are required with n/2 micro switches at each stage.

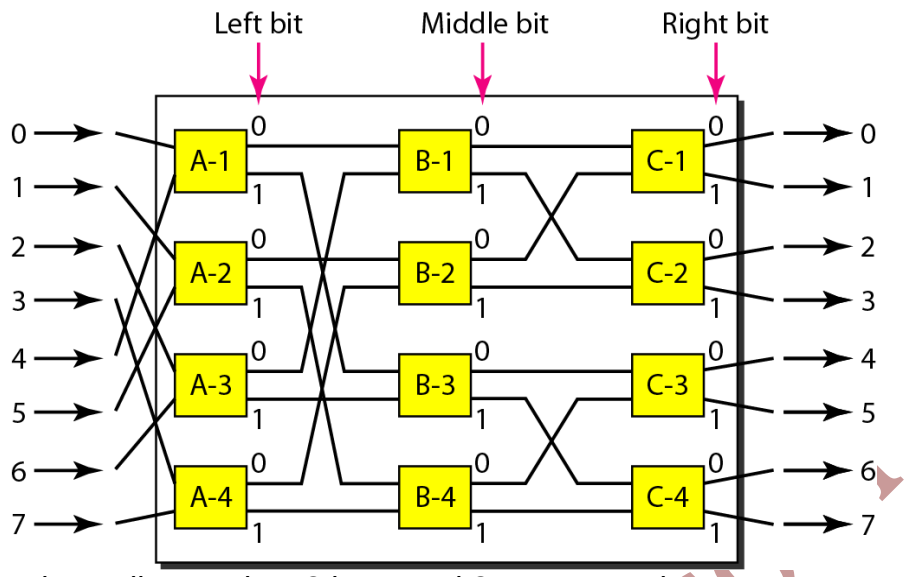

- Above diagram has 8 input and 8 output port hence log2 (8) = 3 stages and 8/2=4 switches each stages.

3.5 DIGITAL SUBSCRIBER LINE (DSL)

- ***Digital*** **-** means a line able to carry data traffic in its original form, as opposed to analogue
- ***Subscriber Line**** **-** the line connecting the individual subscriber *(e.g. a household)* to the local exchange.
- DSL provides high speed internet access over the twisted pair cable of telephone network.
- DSL technologies summarized as **xDSL** include:
  - ADSL, ADSL Lite, HDSL, SDSL, VDSL.

Advantages of DSL:

- You can leave your Internet connection open and still use the phone line for voice calls.
- The speed is much higher than a regular modem
- DSL doesn't necessarily require new wiring; it can use the phone line you already have.
- The company that offers DSL will usually provide the modem as part of the installation.

Disadvantages of DSL:

- A DSL connection works better when you are closer to the provider's central office. The farther away you get from the central office, the weaker the signal becomes.

- The connection is faster for receiving data than it is for sending data over the Internet.
- The service is not available everywhere.

ADSL (Asymmetric DSL)

- The speed for downstream is higher than for upstream hence asymmetric.
- The service is suitable for low bandwidth customer.
- It uses existing local loop.
- Voice communication required only 4 kHz of bandwidth out of 1.1 MHz bandwidth of twisted pair cable.
- Removing the voice filter the remaining bandwidth is used for data transmission.
- ADSL is adaptive technology. It checks the existing local loop available bandwidth to decide the data rate.
- ADSL uses discrete multitude technique (DMT) which combines QAM and FDM for modulation.
- ADSL modem is required at customer end.
- Splitter at customer end separates local loop into voice and data channels.
- The data channel is connected to ADSL modem and voice to telephone box.
- A digital subscriber line access multiplexer (DSLAM) is installed at telephone company site.
- DSLAM functions same as ADSL modem and further packetizes the data and forward it to ISP.
- ADSL is a **distance-sensitive technology**: As the connection's length increases, the signal quality decreases and the connection speed goes down.

ADSL Bandwidth Distribution

- ADSL uses 256 channels of 4000 kHz each.
- Channel 0 is reserved for voice communication.
- Channel 1 to 5 is used as guard band.
- Channel 6 to 30 (25 channels) are used for upstream and control.
- Channel 31 to 255 is utilized for downstream.

DSL Technologies comparison:

Technology	Downstream Rate	Upstream Rate	Distance (ft)	Twisted Pairs	Line Code
ADSL	1.5–6.1 Mbps	16–640 kbps	12,000	1	DMT
ADSL Lite	1.5 Mbps	500 kbps	18,000	1	DMT
HDSL	1.5–2.0 Mbps	1.5–2.0 Mbps	12,000	2	2B1Q
SDSL	768 kbps	768 kbps	12,000	1	2B1Q
VDSL	25–55 Mbps	3.2 Mbps	3000–10,000	1	DMT

3.6 SUMMARY

- In FDM, multiple channels are combined onto a single aggregate signal for transmission. The channels are separated in the aggregate by their FREQUENCY.
- In Time Division Multiplexing, channels "share" the common aggregate based upon time
- Statistical TDMs are such that they only utilize aggregate bandwidth when there is actual data to be transported from I/O ports.
- Wavelength-division multiplexing (WDM) is a method of combining multiple signals on laser beams at various infrared (IR) wavelengths for transmission along fiber optic media.
- The spread spectrum has the larger bandwidth than the normal signals.
- The use of spread spectrum makes jamming and interception more difficult and improves reception. The use of spread spectrum makes jamming and interception more difficult and improves reception.
- Cable is the medium through which information usually moves from one network device to another.
- The type of cable chosen for a network is related to the network's topology, protocol, and size.
- Coaxial cabling has a single copper conductor at its center. A plastic layer provides insulation between the center conductor and a braided metal shield. The metal shield helps to block any outside interference from fluorescent lights, motors, and other computers.
- Fiber optic cabling consists of a center glass core surrounded by several layers of protective materials. It transmits light rather than electronic signals eliminating the problem of electrical interference.

- A switch serves as a controller, enabling networked devices to talk to each other efficiently.
- A **network switch** is a small hardware device that joins multiple computers together within one local area network (LAN). Technically, network switches operate at layer two (Data Link Layer) of the OSI model.
- The Banyan switch is a multistage self-routing architecture.
- Buffers must lie inside the packet switch to achieve a reasonably low packet loss rate.
- DSL is a technology for bringing high- bandwidth information to homes and small businesses over ordinary copper telephone lines
- In ADSL speed for downstream is higher than for upstream hence asymmetric.

3.7 UNIT END EXERCISE

1. What are the goals of multiplexing?
2. Explain TDM.
3. Distinguish between synchronous and statistical TDM.
4. Define spread spectrum and its goal. List the spread spectrum techniques.
5. What are the applications of spread spectrum modulation?
6. Write down the advantages and disadvantages of FHSS system.
7. Name the two major categories of transmission media.
8. What are the three major classes of guided media?
9. What are the characteristics of coaxial cable?
10. List the advantages and disadvantages of fibre optics.
11. Write short note on infrared.
12. Distinguish between circuit switching and packet switching.
13. Explain VPN setup phase.
14. Write note on VPN.
15. Describe the structure of time division switch.
16. Compare various DSL technologies.
17. Write short note on DSL.

3.8 FURTHER READING / Acknowledgement

1. Data Communication & Networking by Behrouz A. Forouzan, IV Edition, Tata McGraw-Hill.

❖❖❖❖